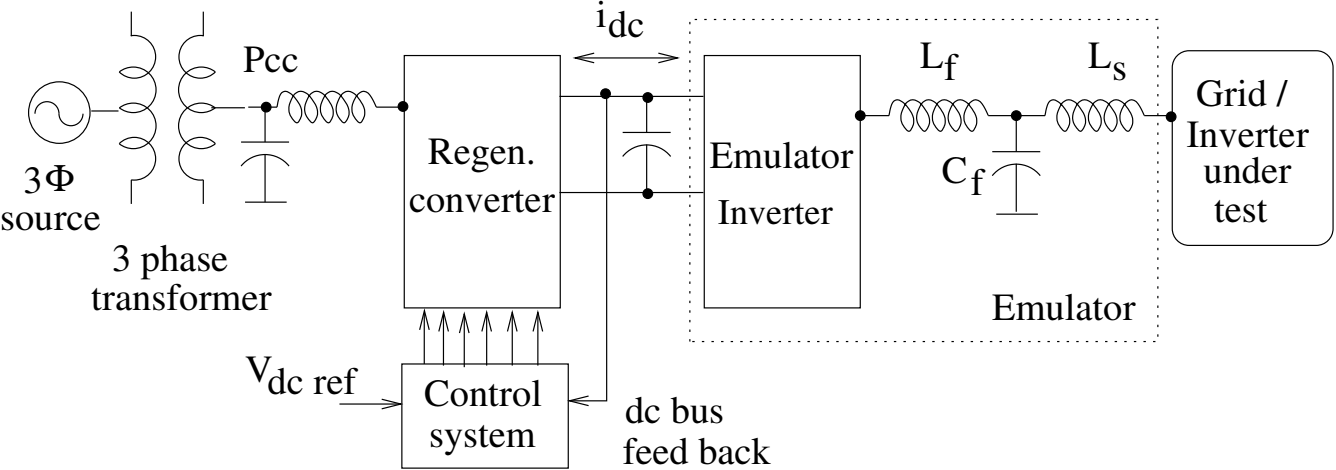
i_{dc}
Pcc
L_f
L_s
Grid / Inverter under test
3Φ source
3 phase transformer
Regen. converter
Emulator Inverter
C_f
Emulator
$V_{dc\ ref}$
Control system
dc bus feed back