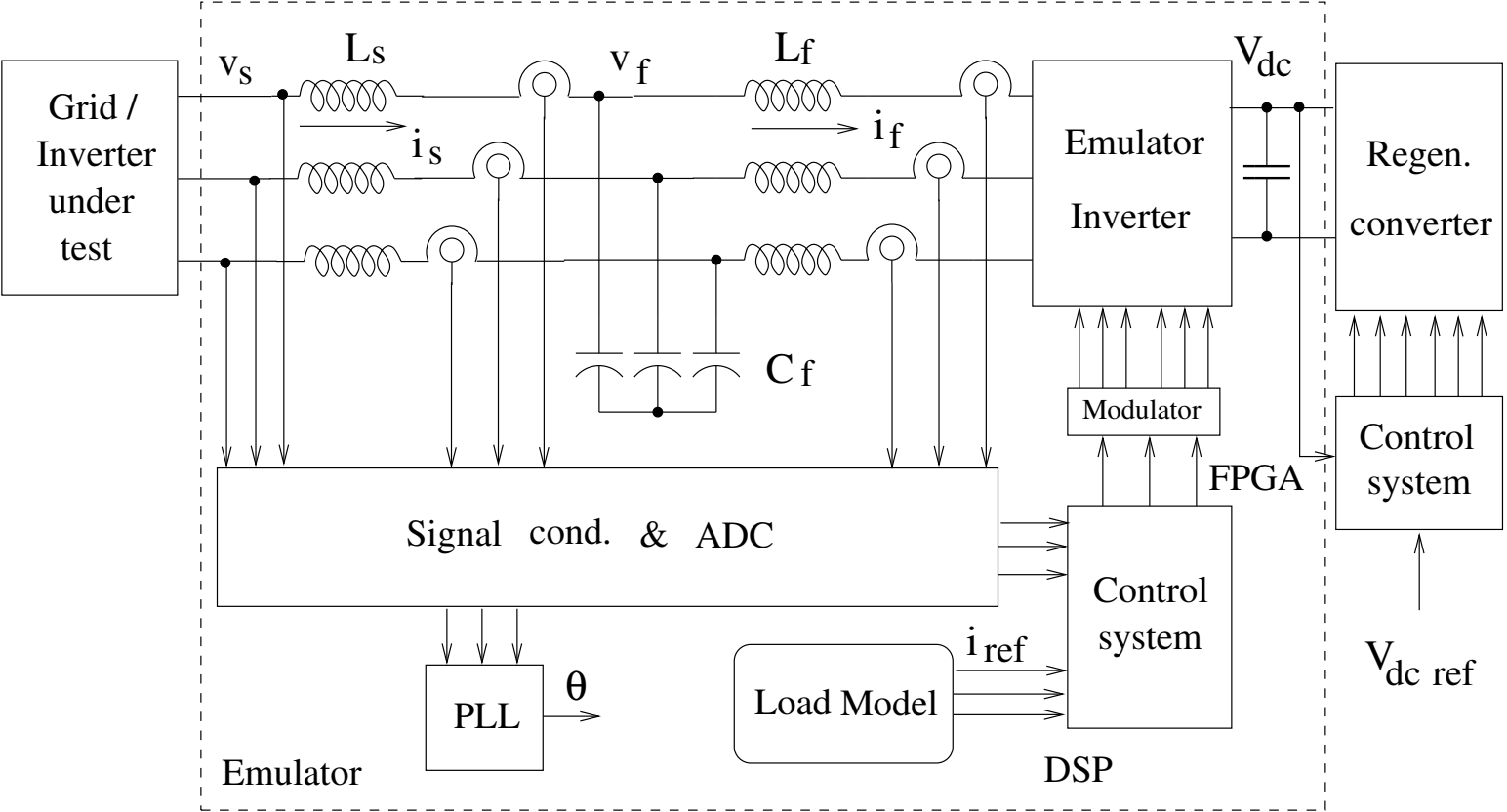
Grid / Inverter under test
v_s
L_s
i_s
v_f
L_f
i_f
C_f
Emulator Inverter
V_{dc}
Regen. converter
Modulator
FPGA
Control system
$V_{dc\ ref}$
Signal cond. & ADC
Control system
i_{ref}
PLL
θ
Load Model
Emulator
DSP